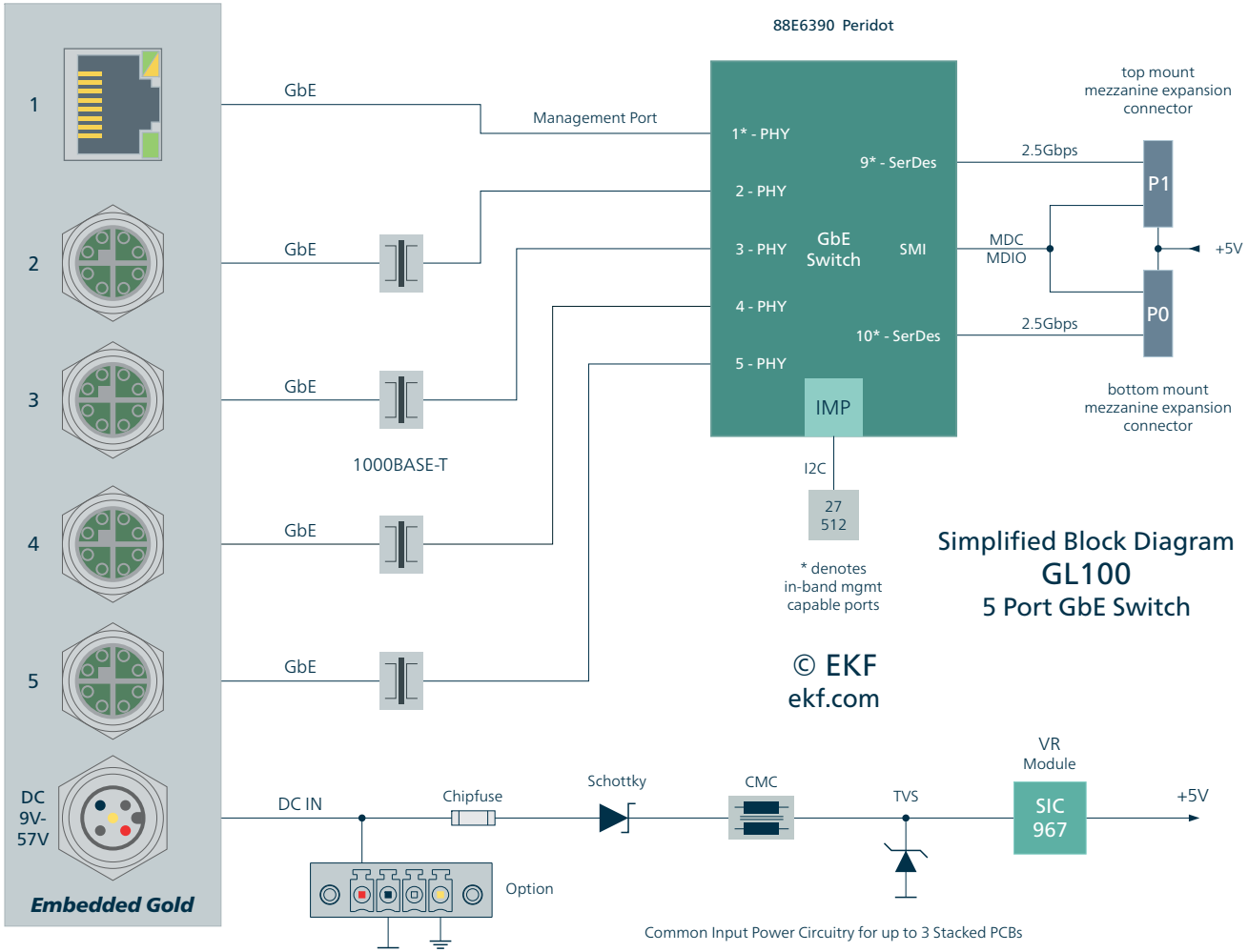
88E6390 Peridot
1
2
3
4
5
DC
9V-
57V
Embedded Gold
GbE
Management Port
1* - PHY
2 - PHY
3 - PHY
4 - PHY
5 - PHY
9* - SerDes
10* - SerDes
GbE Switch
SMI
IMP
2.5Gbps
MDC
MDIO
+5V
P1
P0
top mount
mezzanine expansion
connector
bottom mount
mezzanine expansion
connector
1000BASE-T
I2C
27
512
* denotes
in-band mgmt
capable ports
Simplified Block Diagram
GL100
5 Port GbE Switch
© EKF
ekf.com
DC IN
Chipfuse
Schottky
CMC
TVS
VR
Module
SIC
967
Option
Common Input Power Circuitry for up to 3 Stacked PCBs